British Journal of Mathematics & Computer Science
15(5): 1-12, 2016, Article no.BJMCS.24854
ISSN: 2231-0851

SCIENCEDOMAIN *international*
www.sciencedomain.org

Data Glove: Internet of Things (IoT) Based Smart Wearable Gadget

Anand Nayyar[1] and Vikram Puri[2*]

[1]Department of Computer Applications and IT, KCL Institute of Management and Technology, Jalandhar, India.
[2]Member-ACM, The IRED, IAENG, CSI, India.

Authors' contributions

The work is being carried out in collaboration between the authors AN and VP. Author AN has done detailed and depth survey is being done on Internet of Things (IoT)- history, overview of technology, recent developments and challenges cum issues surrounded in IoT. Author AN surveyed regarding various products and sensors which are available till date in the market and proposed a novel idea of Data Glove. Author VP surveyed an in-depth brain storming of construction and development of Data Glove- overall product design, sensors integration, circuit design and overall code and testing is done by both authors. The testing of the final product in the real world is being done by authors AN and VP. Overall writing of the paper is being done by both authors.

Article Information

DOI: 10.9734/BJMCS/2016/24854
Editor(s):
(1) Victor Carvalho, Polytechnic Institute of Cávado and Ave, Portuguese Catholic University and Lusiada University, Portugal.
Reviewers:
(1) Anonymous, National Institute of Industrial Engineering (NITIE), Mumbai, India.
(2) M. Bhanu Sridhar, GVP College of Engg. For Women, Vizag, India.
(3) Kexin Zhao, University of Florida, USA.
(4) Yueran Gao, Southern Illinois University Carbondale, USA.
Complete Peer review History: http://sciencedomain.org/review-history/14031

Original Research Article

Received: 4th February 2016
Accepted: 15th March 2016
Published: 5th April 2016

Abstract

The dawn of Internet of Things (IoT) has started its journey for new era of smart and portable devices. IoT is regarded as hard-core for integrating various sensors, microcontrollers and all sorts of communication protocols and lays the foundation for futuristic communication standard i.e. Human-Things Interaction. The aim of this research paper is to highlight the concept of Internet of Things (IoT) and in addition to this, a Data Glove- An IoT based smart wearable gadget capable to perform various tasks like temperature monitoring, ambient light detection and gesture control has been proposed. Data Glove is equipped with various sensors like LM35, Ambient, 3-Axis Accelerometer and Arduino IDE Serial Monitor for capturing the sensor data. Data Glove is highly energy efficient and can be operated by

**Corresponding author: E-mail: vikrampuri@acm.org;*

9V battery and has huge potential for live implementations in varied areas like Robotics cum Artificial Intelligence, Corporate Houses for Sensor data measurement, R&D Institutes and even can be deployed in various day to day activities.

Keywords: Internet of Things (IoT); Data Glove; wearable technology; sensors; LM35; 3-AXIS accelerometer; LDR; nRF24L01; Arduino.

1 Introduction

The term "IoT- Internet of Things" [1] is regarded as next generation computing of Internet Connected Devices and is now evolving towards "Internet of Everything". IoT is playing a crucial role in transformation of "Traditional Desktop Computing" to "Next Generation Everywhere Computing". Nowadays, the trend is shifting towards Next Generation High Speed, QoS Wireless Communication Standards and High Speed Mobile Broadband Networks like 4G, LTE and even 5G. With IoT, various gadgets like RFID devices, Sensors, Mobile Phones, Tablets, Wearable Gadgets etc. can be connected to Internet and facilitates wider connectivity. Internet of Things (IoT) [2] lays strong foundation for connecting "Things" over Internet so that "Things" can be operated anywhere and everywhere and by anyone and everyone. In IoT environment, sensors and RFID technology provides basis to connect the things and enabling things to share information so that data can be stored, processed and presented in easy understandable form.

IoT facilitates smart connectivity and context-aware computing via network resources. To make Today's World IoT Compliant, huge transformation is required in present computing system in terms of new smart devices, new communication protocols and security to make existing world to be known as "SMART IoT World".

The term IoT-Internet of Things [3] was coined by "Kevin Ashton" [4] in 1999 with regard to Supply Chain Management. But seeing the current scenario, the term IoT has been expanded to wide range of applications like Utilities, Transport, Wearable Technologies, Smart Home Automation and even Military Applications like Robotics and Drones. IoT technology is transforming the way we live life every day. From consumer point of view, new IoT products like Home Automation, wearable devices, Household devices etc. are evolving and IoT technology is also giving lots of benefits even to disabled people with development of various health monitoring devices, wearable medical gadgets, Remote Health Monitoring equipment's etc. IoT Technologies [5] like Vehicle Networking, Traffic Management Intelligent Systems are integrated with sensors fitted on roads transforming traditional cities to "SMART CITIES" and overcoming various issues like Traffic Jams, Road Accidents etc. Even though, IoT technology is blessing mankind with huge transformations and improvements in day to day activities, but on the other hand, IoT technology is surrounded by many issues, challenges and drawbacks with regard to security, privacy, data management, hardware failure (sensors failure) etc. which has to be combated as soon as possible for its wide adoption.

A large number of IT firms and even research organizations worldwide are seeing lots of potential in the growth of IoT and has released various reports regarding it. CISCO has projected- 24 Billion connected IoT devices by 2019, Morgan Stanley projected- more than 75 Billion networked devices by 2020. Huawei projects- 100 Billion IoT devices by 2025. So, seeing the data projections IT Industry-R&D Incubation centers, Specialized R&D Institutions and Academia Researchers across the nook and corner of the world are researching on various IoT product developments and also on various issues pertaining regarding IoT effective implementations.

Considering the huge potential of IoT Technology, current and undergoing development, a novel IoT based wearable Gadget- **Data Glove**- based on Arduino Technology integrated with varied Sensors like Temperature, Ambient Light and Accelerometer using 2.4 GHz Wireless Module for transmission of Data is developed and proposed in this research paper.

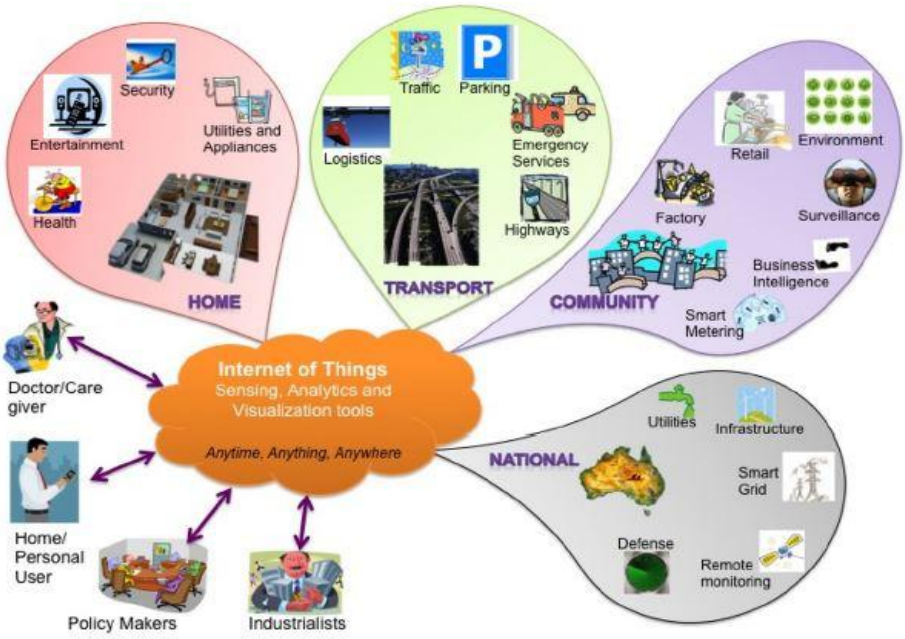

Fig. 1. Internet of Things (IoT) showing end users and varied application areas

1.1 Organization of paper

Section II will covers overview of Internet of Things (IoT) Technology- Definition, History and IoT Technologies; Section III elaborates "Novel Proposed IoT Gadget- Data Glove- Definition, Components, Sensors, Circuit Diagrams; Section IV highlights in-depth coverage of live demonstration of Data Glove along with Data Output, Section V covers conclusion and future scope.

2 Overview of IoT (Internet of Things)-Technology

2.1 Definition of Internet of Things (IoT)

Considering Definition of IoT [6], currently there exists no standardized definition of Internet of Things (IoT). But various definitions are coined by industry experts, researchers, innovators, inventors seeing its various application areas potential. The most reliable and justified definition of IoT coined till date is as follows:

> "*An Open and Comprehensive network of intelligent objects that the capacity to auto-organize, share information, data and resources, reacting and acting in face of situations and changes in the environment*".

The word Internet of Things (IoT) [7] is composed of two words: Internet and Things. Internet may be defined as global network of interconnected computers using TCP/IP protocol to share information among trillions of users worldwide. The word "Things" [8] include any objects, any objects ranging from electronics, daily used devices and gadgets etc. So, the term, IoT can be analyzed as "Global Communication Network which facilitates communication between Man to Man, Man to Objects and Objects to Objects and thereby giving each object a unique identity for hassle free data transmission over the global network i.e. Internet.

2.2 History of development of IoT

History of Development of IoT [9]

A. *1999:* The term "IoT" [10] was coined by Kevin Ashton [1], Co-founder of Auto-ID center at MIT and created global standard system for RFID and other sensors. Regarded as big year for IoT and MIT. Neil Gershenfeld also quoted IoT in his book titled "When Things Start to Think". Kevin Ashton, David Brock and Sanjay Sarma developed "Electronic Product Code".
B. *2000:* LG made a big announcement of "First IoT Refrigrator"
C. *2002:* David Rose created "The Ambient Orb" in MIT Media Lab and this invention led to the annoucement by NY Times Magazine as "Ideas of Year".
D. *2003-04:* RFID was adopted on large scale by U.S. DoD (Department of Defense) in SAVI Program along with Walmart in consumer sector.
E. *2005:* Internet of Things (IoT) report was published by UN's ITU.
F. *2008:* First conference in Europe on IoT was held. IPSO alliance promoted the use of IP in networks of "Smart Objects" and to enable "IoT". FCC approved the use of "White Space Spectrum". CISCO announced the "Birth of IoT".
G. *2010:* Wen Jiabao, Chinese Premier announced heavy investments for popularization of IoT in China.
H. *2011:* IPv6 lanched.
I. *2015:* Year of Cloud and IoT

2.3 Internet of Things (IoT)- technologies

Internet of Things (IoT) [11] was basically the inspiration from RFID community members. With IoT, any object can mark its entry into Internet via different tagging technologies like NFC, RFID and Barcode. IoT, when combined with varied Sensors, facilitates varied objects come closer and formulate an Adhoc Network and share information. IoT has brought a huge revolution in IT industry in the area of computing, mobile networks, sensor networks, vehicular networks, Satellite Networks and FANET (Flying Drones Network).

The following technologies laid a strong foundation for design and development cum popularization of IoT and dramatically improvised the scope for its implementation and wide adaptability:

1. RFID (Radio Frequency Identification): RFID incorporates the use of Electromagnetic or electrostatic coupling in the Radio Frequency (RF) portion of the electromagnetic spectrum to uniquely identify an object, person etc. RFID system is comprised of Five Main Components: An Antenna, Transreceiver, Transponder, Software and Server. RFID is classified into three categories: Active; Passive and Semi Passive. RFID technology acts as backbone in IoT for uniquely indetifying the objects in efficient manner.
2. Electronic Product Code: EPC was developed by Auto-ID from MIT for sharing data in real time via Unique Identifier and EPC makes use of RFID and wireless technology. EPC is 96-bit code recorded on RFID and was invented to improve EPC bar code system. EPC code stores the information like: EPC, UID of Product, Specifications, Information of Manufacturer etc. EPC has 4 components namely: Object Naming Service (ONS), EPC Discovery Service (EPCDS), EPC Information Services (EPCIS) and EPC Security Services (EPCSC).
3. Wi-Fi: Wi-Fi today has enabled the sharing of computers and network without any use of wires and facilitates wireless distribution of data. Wi-Fi technology has been significantly improved in recent times in terms of speed, QoS, security, broader connectivity range and various standards being developed like 802.11a/b/g/n/ac and even ad standard is under rigourous development for live implementation as soon as possible. Wi-Fi, nowadays is extended to new High Quality Standards WiMAX, WiBRO, Mobile-Fi etc.

4. Bluetooth: Bluetooth is the most cost-effective, short range radio technology to share data between mobiles, tablets, laptops and other handheld devices. Bluetooth range from 10-100mts and creates Personal Area Network (PAN). A set of devices sharing data on same bluetooth communication channel forms "Piconet".
5. ZigBee: Zigbee is regarded as the most commonly used technology in IoT devices these days because of its long range, high speed, security and overall Quality of Service (QoS) in transmission. It is IEEE 802.15.4 protocol based specification for a suite of high level communication protocols used to create PAN (Personal Area Networks) with small, low power digital radios.
6. Wireless Sensor Network (WSN): Wireless Sensor Networks (WSN) are spatially distributed interconnected autonomous sensors for acquiring various types of data in terms of Temperature, Humidity, Sound etc. WSN is regarded as indespensible part of IoT Technology. In almost every IoT gadget, sensors are embedded facilitating transmission of data in terms of temperature, light, accelerometer, humidity and so on.
7. 2.4 Ghz nRF24L01: It is a single chip 2.4 Ghz transceiver designed for ultra low power wireless applications. The nRF24L01 operates on ISM frequency band at 2.4-2.4835 GHz. It uses GFSK modulation and has user configurable parameters like frequency channel, output power and air data-rate.

3 Data Glove- A Novel Proposed Wearable IoT Device

In today's era of computing, lots of new research is being carried out in the area of Virtual Reality, Augmented Reality, Holograms, Wearable devices like Smart Watches, Health Bands etc. Various manufactures have come up with Gadgets like Samsung Gear VR, Oculus Rift, Microsoft Hololens, Wearable Watches like Moto 360, Microsoft Band, Apple iWatch and the face of Human-Computer Interaction is changing day by day. IoT is also transforming the face of various applications like Gaming, Movie Experience, 4D View, HD Displays and even Large Projection Screens.

3.1 What is Data Glove?

A Data Glove is an interactive device, resembling a glove worn on the hand, which facilitates tactile sensing and fine-motion in robotics and virtual reality. Tactile sensing involves simulation of the sense of human touch and includes the ability to perceive pressure, linear force, torque, temperature and surface texture. A Data Glove is equipped with sensors that sense the movements of hand and interfaces with various sensors and sends the data back to the computer.

Data Gloves are basically used in diverse fields like Virtual Reality, Robotics, Biomedical Engineering Applications, R&D Organizations, Military, Hospitals and even Large Scale Manufacturing Units for controlling various machines and doing efficient product operations.

In this paper, a novel IoT based wearable Data Glove equipped with Temperature Sensor, Ambient Light and Gesture Control (Accelerometer Sensor-3 AXIS) has been proposed. The glove is controlled via Transceivers capable to play the role of both transmitter and receiver.

3.2 Hardware, Sensors, Modules & Software's behind development of proposed Data Glove-IoT Wearable device

In this section, various Hardware's, Software cum Sensors being utilized for development of Data Glove along with their tasks being performed in overall operation of Data Glove is also highlighted:

3.2.1 Hardware

1. Arduino Nano [12]: Arduino Nano is a small, complete and breadboard-friendly board based on ATmega328/168. It is powered via Mini-B USB connection, 6-20V unregulated external power

supply or 5V regulated external power supply, has 32KB memory and has 14 Digital Pins. It takes input from sensors embedded on the Data Glove and gives output to Arduino IDE software via 2.4GHz wireless nRF24L01 module.

2. Arduino UNO [12]: Arduino UNO is the best board for working on Electronics and research on IoT and is based on ATmega328p. UNO is equipped with 14 Digital I/O pins, USB connection, Power jack and ICSP header. Can be easily connected to PC via USB Port. It receives input from Arduino Nano via 2.4GHz wireless nRF24L01 module and gives output to Arduino IDE all the sensor values.

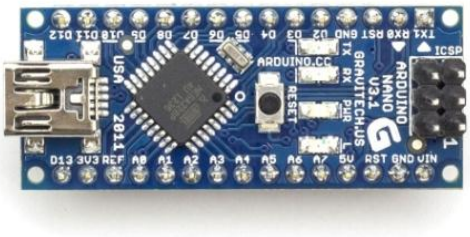

Fig. 2. Arduino Nano board

Fig. 3. Arduino UNO

3.2.2 Sensors

1. Temperature Sensor (LM35): Temperature Sensor is basically used for measuring temperature variations around the sensor. LM35 is highly accurate temperature sensor used for research purposes. LM35 has varied features like: Direct calibration in Celsius degree; measures temperature ranging from -55 to +150 degree in Celsius.

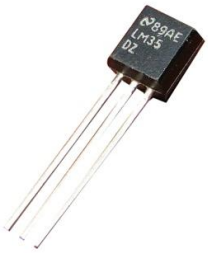

Fig. 4. LM35 temperature sensor

2. LDR Sensor (Light Dependent Resistor): LDR Sensor or a Photo resistor is a device whose resistivity is a function of the incident electromagnetic radiation. Also known as Photo conductors, Photo conductive cells or simply photocells. LDR sensors are made up of semiconductor materials having high resistance. An LDR Sensor works on principle of photo conductivity. When the light strikes on LDR sensor, the electrons present in the valence band will shoot to the conductance band and conductivity becomes high.

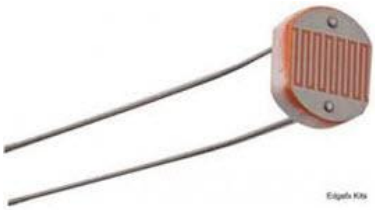

Fig. 5. LDR sensor

3. 3-Axis Accelerometer (ADXL335): The ADXL335 is a small, thin, low power, complete 3-axis accelerometer with signal conditioned voltage outputs. The product measures acceleration with a minimum full-scale range of ±3 g. It can measure the static acceleration of gravity in tilt-sensing applications, as well as dynamic acceleration resulting from motion, shock, or vibration. Accelerometer sensor is regarded as electromechanical device for measuring acceleration forces which may be static like constant force of gravity pulling at your feet and could be dynamic. 3-Axis accelerometer comprise of a Mass at the center of chip of sensor, suspended by 4 Beams doped with Piezo-resistive material. It is used to measure the motion on X- and Y- Axis.

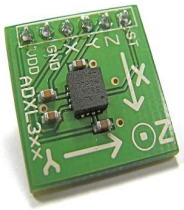

Fig. 6. ADXL335 Sensor

3.2.3 Modules

1. nRF24L01: nRF24L01 is an integrated, ultra-low power 2Mbps RF transceiver operating at ISM Band of 2.4 Ghz. It integrates RF transceiver, RF synthesizer and baseband logic including Enhanced Shock Burst hardware protocol accelerator. It is most accurate transmitter and receiver for sending and receiving data from various sensors and useful in IoT devices development.

Fig. 7. nRF24L01

3.2.4 Software

Arduino IDE ([12]): Arduino IDE is an open source software facilitating users to write source code for Arduino Boards. Arduino IDE software is being used in our proposed data glove for capturing data from varied sensors embedded in proposed data glove and is used for reading the sensor values.

The following screenshot shows the GUI Interface of Arduino IDE software:

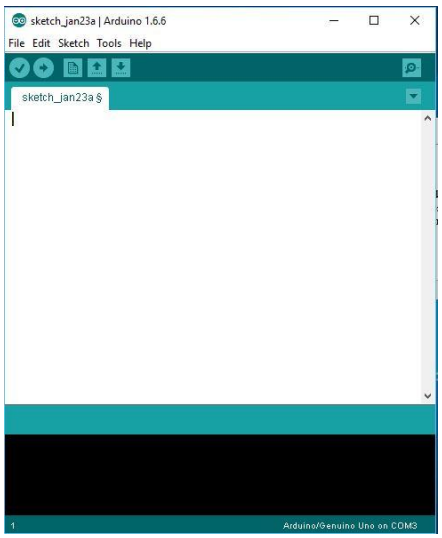

Fig. 8. Arduino IDE Software-GUI

3.2.5 Proposed Data Glove- circuit operation

Data Glove is further divided into the two parts:

1. Transmitter
2. Receiver

3.2.5.1 Transmitter

In Transmitter Section, the main processing unit is Arduino Nano. It takes input from different sensor and gives output to 2.4 Ghz transceiver. The sensors used in this Data Glove are LM35(Temperature Sensor), LDR (Ambient Light), and ADXL335 (3-AXIS Accelometer). Sensors are giving the analog values. LM35 is directly proportional to the Celsius scale. It gives 10mV output for every 1°C. LDR is used for light detecting. LDR changes its resistance according to the amount of light falls. 3-AXIS Accelometer gives the gesture value for X, Y and Z axis. It provides the analog value. All the sensors provide the analog value and Arduino Nano performs the task of converting these analog values to digital values via ADC (Analog to Digital) Convertor. The values are processed via Arduino Nano and sent to receiver side via nRF24L01 transceiver. nRF24L01 Transceiver does the task of transmitter as well as receiver and communicate the real time values.

3.2.5.2 Receiver

In the Receiver section, Arduino UNO is the main processing unit/Microcontroller. It takes input from nRF24L01 Module and capture the real time value from the Data Glove. It differentiates various sensor values into definite manner and send to ARDUINO IDE Serial Monitor via Serial Communication interface.

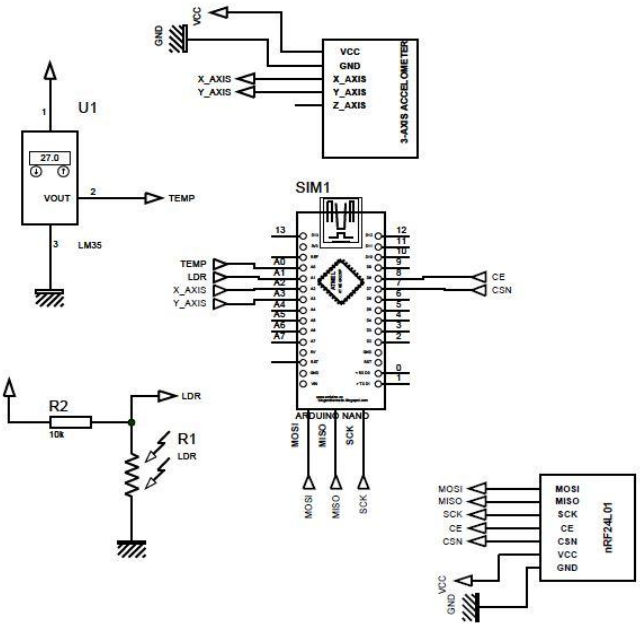

Fig. 9. Circuit diagram of proposed Data Glove- transmitter

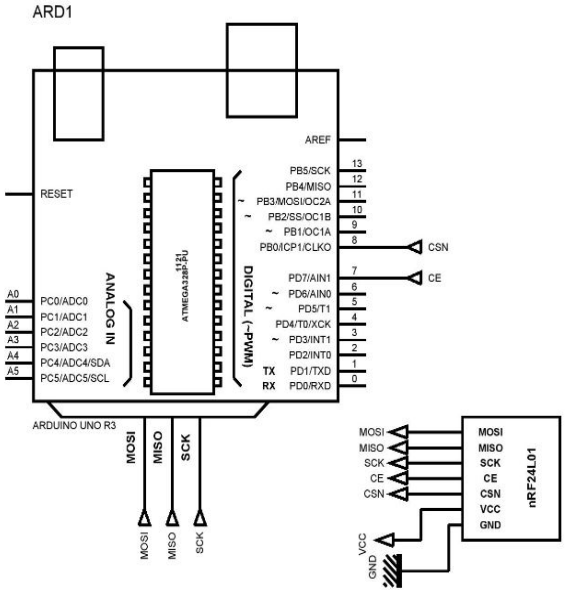

Fig. 10. Circuit diagram of proposed Data Glove- receiver

4 Live Implementation of Data Glove

The following screenshot shows the image of the proposed Data Glove

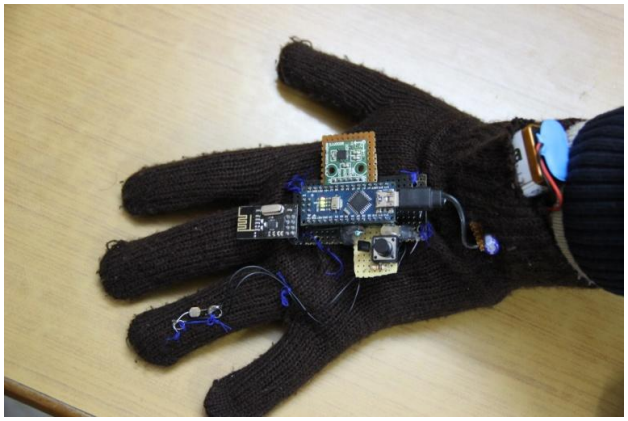

Fig. 11. Proposed Data Glove

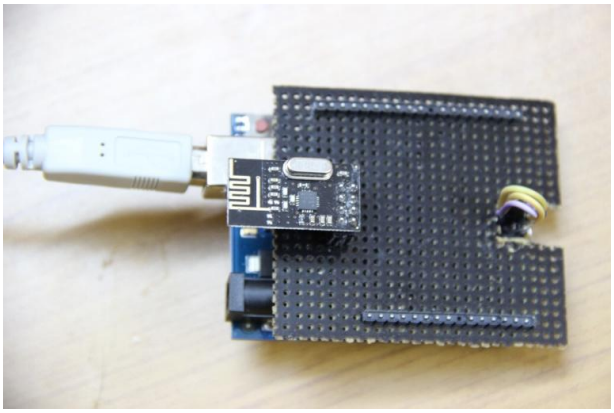

Fig. 12. Receiver section

The following diagram shows the Live Data Capture of Sensors on Arduino IDE Software:

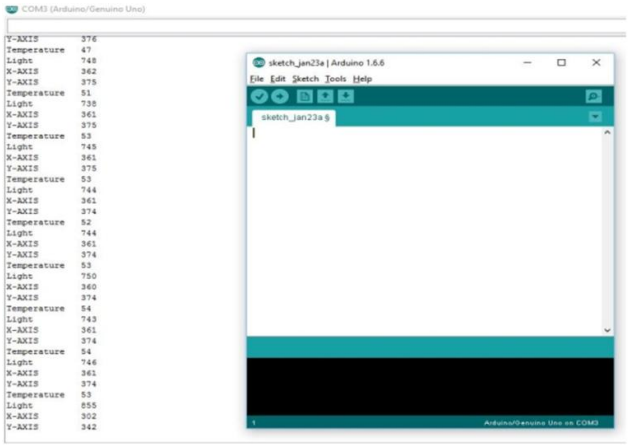

Fig. 13. Live captured data of temperature, light, X-Axis and Y-Axis on Arduino IDE Software transmitted by Sensors

5 Conclusion and Future Scope

5.1 Conclusion

In this research paper, a novel IoT based Wearable glove equipped with various sensors like Temperature, LDR and 3-AXIS Accelerometer is proposed. The glove is powered via 9V Battery (Yielding 1 Month Data Glove Battery Life) and 7805 Voltage Regulator. The Data Glove is highly efficient in delivering data from various sensors and the data can be read via Serial Monitor on Arduino IDE software.

5.2 Future scope

Future work would be more focused on the use of more advanced hardware like ZigBee-Wireless Transmission Module Integration for widened coverage and security. More sensors like Humidity, Event Sensor, Proximity, Soil Sensor etc. would be integrated in the cover to make it more multi-functional device. The work would also be carried out on Security Parameter to have secured end to end cryptographic transmission of data via use of AES-256 Bit encryption algorithm.

Competing Interests

Authors have declared that no competing interests exist.

References

[1] Weber RH. Internet of things–new security and privacy challenges. Computer Law & Security Review. 2010;26(1):23-30.

[2] Madakam S. Internet of Things: Smart things. International Journal of Future Computer and Communication. 2015;4(4):250.

[3] Gubbi J, Buyya R, Marusic S, Palaniswami M. Internet of things (IoT): A vision, architectural elements, and future directions. Future Generation Computer Systems. 2013;29(7):1645-1660.

[4] Ashton K. That ‘‘Internet of Things’’ thing. RFiD Journal; 2009.

[5] Available:ftp://ftp.cordis.europa.eu/pub/fp7/ict/docs/enet/20090128-speech-iot-conference-lux_en.pdf (Accessed on Jan 23, 2016)

[6] Madakam S, Ramaswamy R, Tripathi S. Internet of Things (IoT): A literature review. Journal of Computer and Communications. 2015;3(05):164.

[7] Miorandi D, Sicari S, De Pellegrini F, Chlamtac I. Internet of things: Vision, applications and research challenges. Ad Hoc Networks. 2012;10(7):1497-1516.

[8] Kaukalias T, Chatzimisios P. Internet of Things (IoT).

[9] Available: http://postscapes.com/internet-of-things-history (Accessed on Jan 23, 2016)

[10] Atzori L, Iera A, Morabito G. The internet of things: A survey. Computer Networks. 2010;54(15): 2787-2805.

[11] Shen K, Peng TL. Object recognition and virtual interaction of IOT based on augmented reality [J]. Computer Engineering. 2010;17:036.

[12] Available: www.arduino.cc
(Accessed on Jan 23, 2016)

Peer-review history:
The peer review history for this paper can be accessed here (Please copy paste the total link in your browser address bar)
http://sciencedomain.org/review-history/14031